Illustration A	Handle assemble

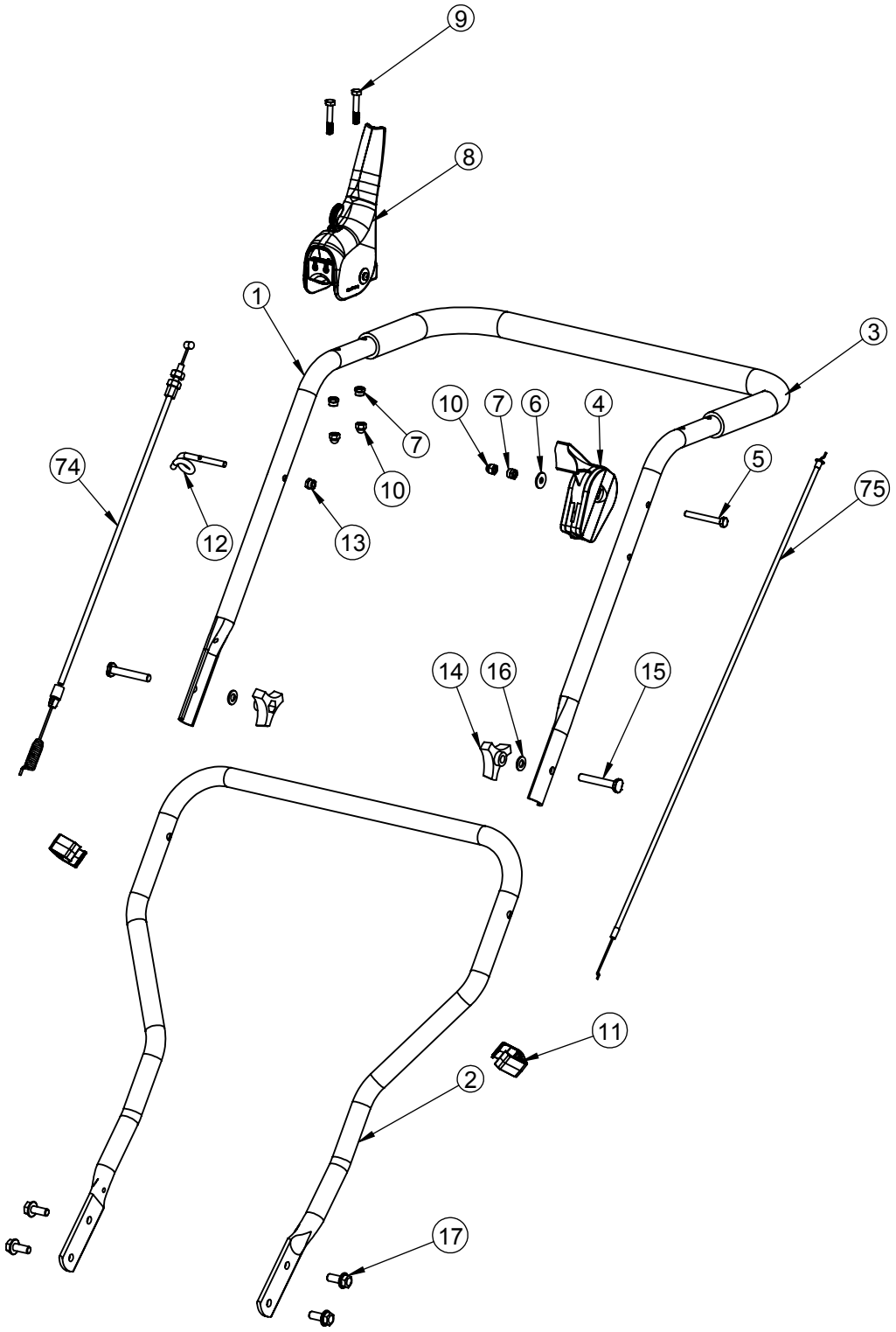

Model: 108J SC Trim

Illustration B

Engine assemble

2017/12/30

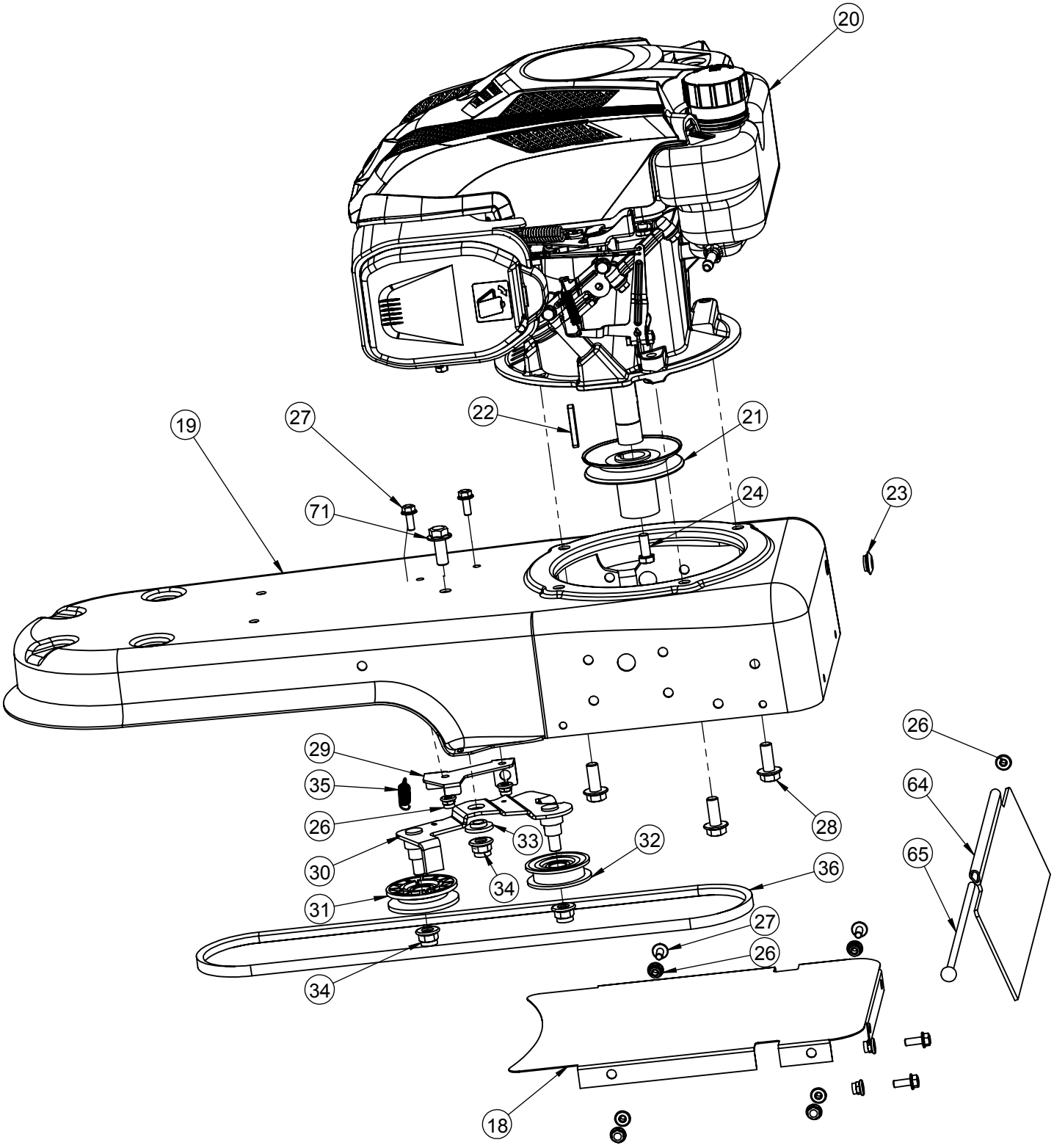

Model: 108 Pro trim

Illustration C

Trim shaft assemble

2017/12/06

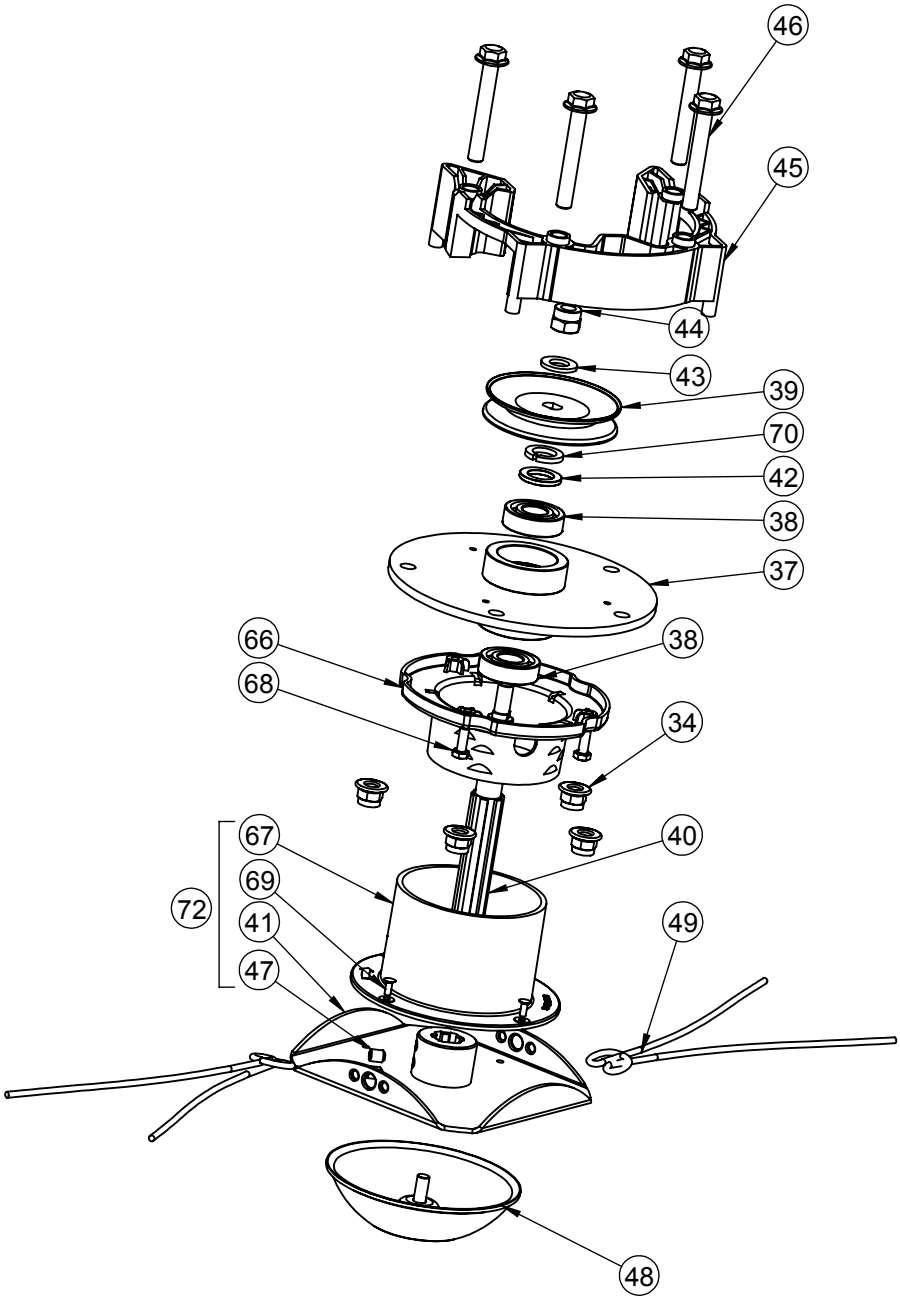

Model: 108 Pro trim

Illustration D

Cover assemble

2017/11/15

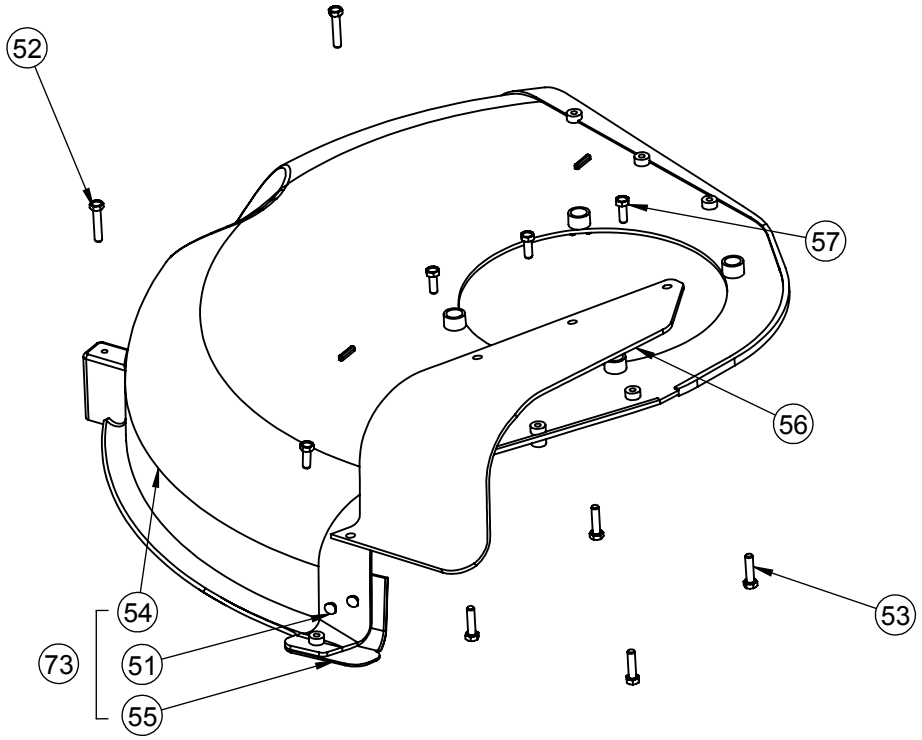

Model: 108 Pro trim

Illustration E

Wheel assemble

2017/08/15

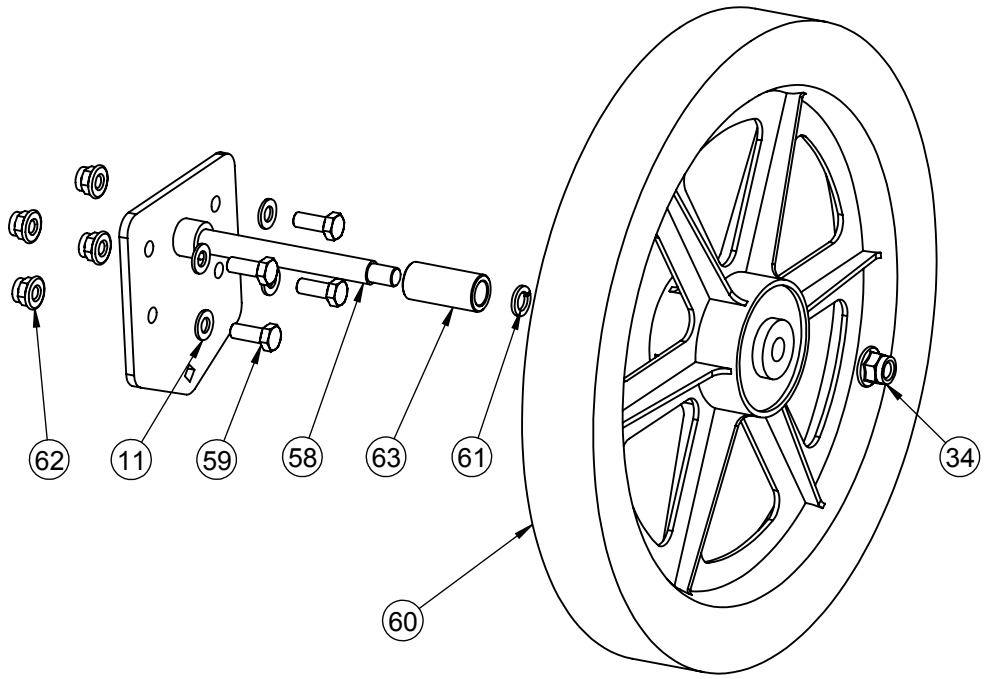

Model: 108 Pro trim