AIR HAMMER

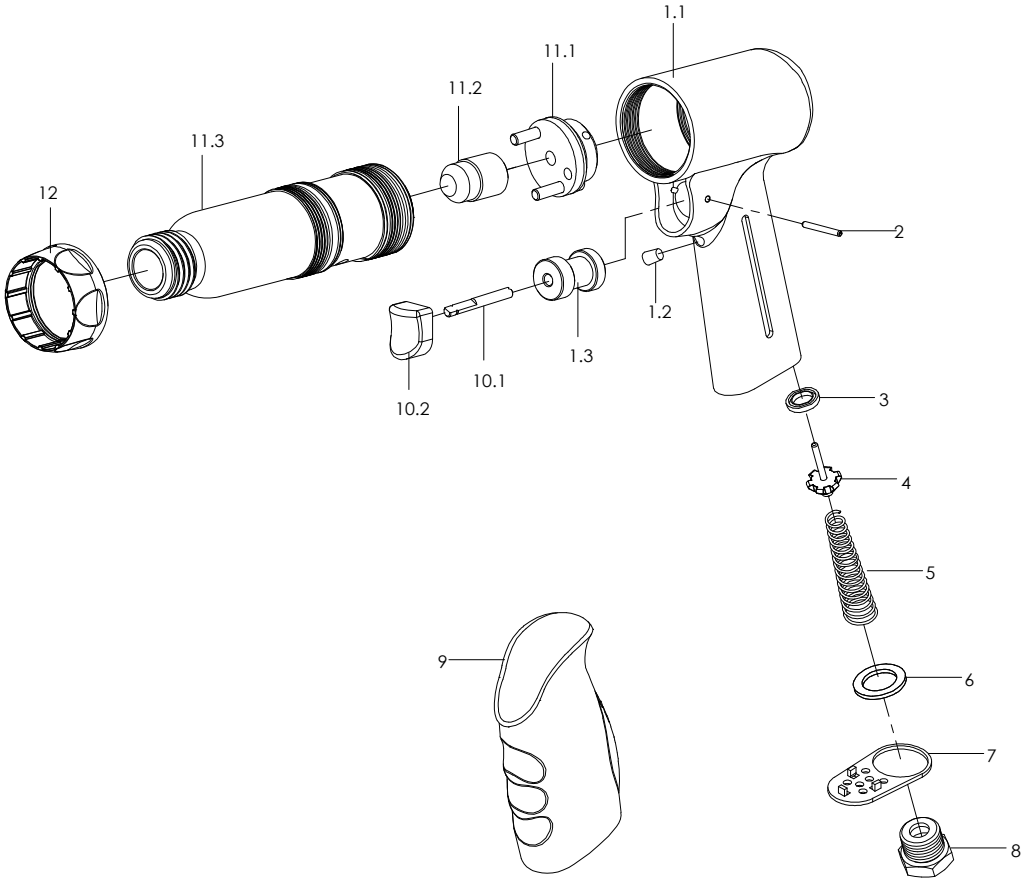

NO	PART NO	DESCRIPTION	Q'TY	ECN	NO	PART NO	OLD PART NO	DESCRIPTION	Q'TY	ECN
1	09030507	Housing Assembly	1							
1.1	25030537	Housing	(N/A)1							
1.2	25030299	Plug	(N/A)1							
1.3	25030699	Bushing	(N/A)1							
2	68001010	Pin	1							
3	30005630	Valve Seat	1							
4	09005301	Throttle Valve Assembly	1							
5	20007199	Spring	1							
6	60003230	O-Ring	1							
7	20032110	Exhaust Deflector	1							
8	20007410	Air Inlet	1							
9	30031030	Handle Cover	1							
10	09008402	Trigger Assembly	1							
10.1	20036510	Pin	(N/A)1							
10.2	30009430	Trigger	(N/A)1							
11	02031001	Cylinder Assembly	1							
11.1	02032301	Valve Seat Assembly	1							
11.2	20031399	Piston	1							
11.3	20031511	Cylinder	1							
12	30031130	Locknut	1							